rev.	revision text	rev date	rev by	apv. date	apv. by
02	general adaptations	2023-12-14	KaSand	2023-12-19	McNaab
03	center marks changed	2025.07.09	LaUlrm	2025.07.09	McNaab
04	Diameter increases, hole pattern added	2025.09.30	SaHuab	2025.10.07	McNaab

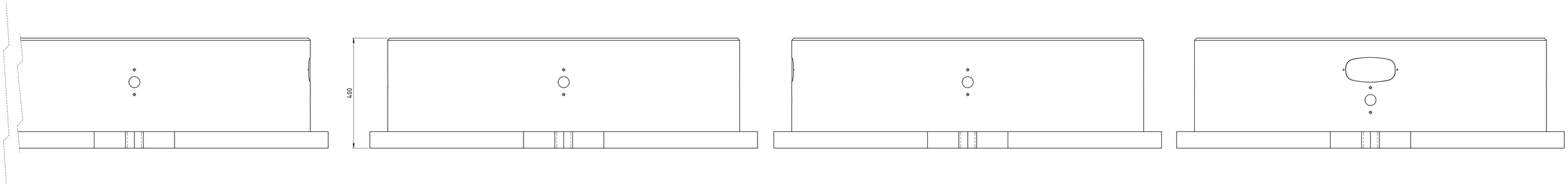

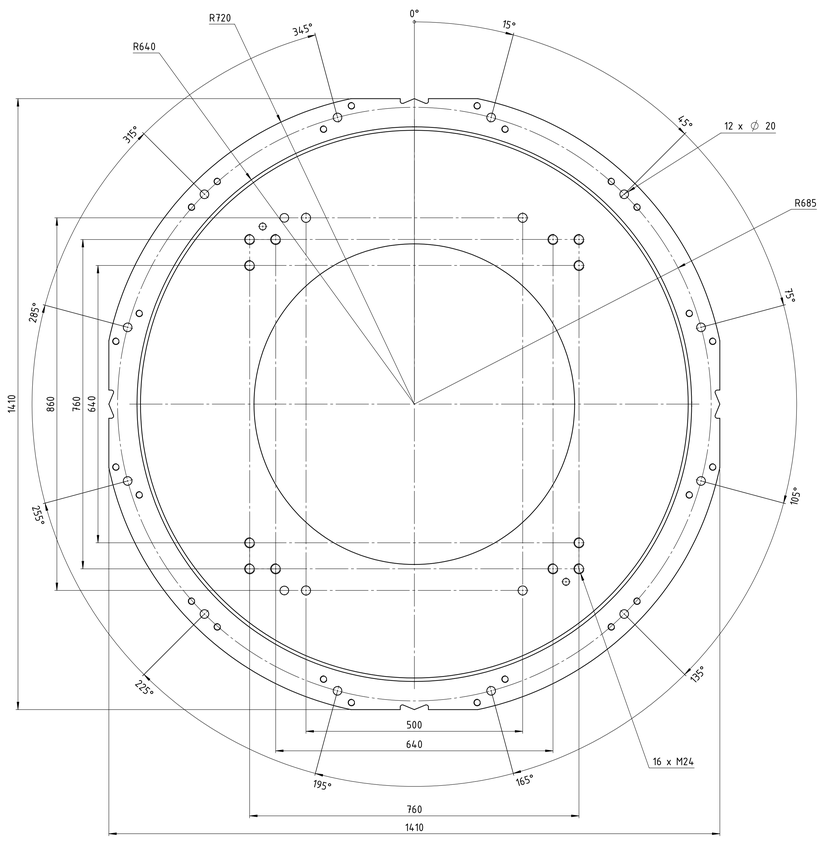

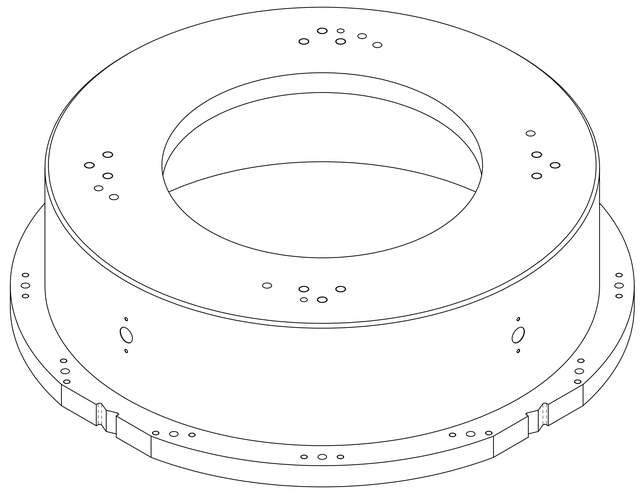

The reproduction, distribution and utilization of this document as well as the communication of its contents to others without express authorization is prohibited. Offenders will be held liable for the payment of damages. All rights reserved in the event of the grant of a patent, utility model or design.

status: Released		YASKAWA www.yaskawa.eu.com	dimension: 1430x1430x400 mm
SAP ZMCA no:	SAP Art no: 230393		weight: 1193.445 kg
where nothing else is indicated tolerances: DIN ISO 2768-mK welding: DIN EN ISO 13920-A no sharp edges	title / description: robot stand T-400		created: 2023-07-19 McNaab
			drawn: 2023-07-19 McNaab
			approved: 2023-07-19 KaSand
			A0
			drawing-no.: 0001060832-100
			revision: 15
			04
			sheet: 4/5